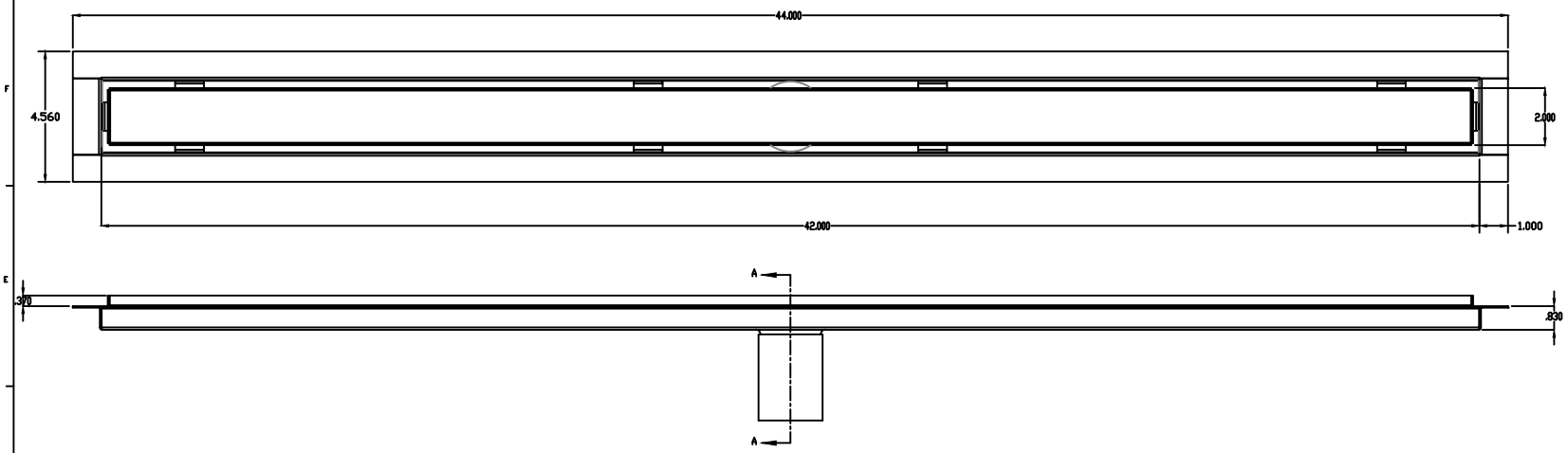

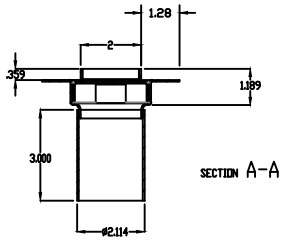

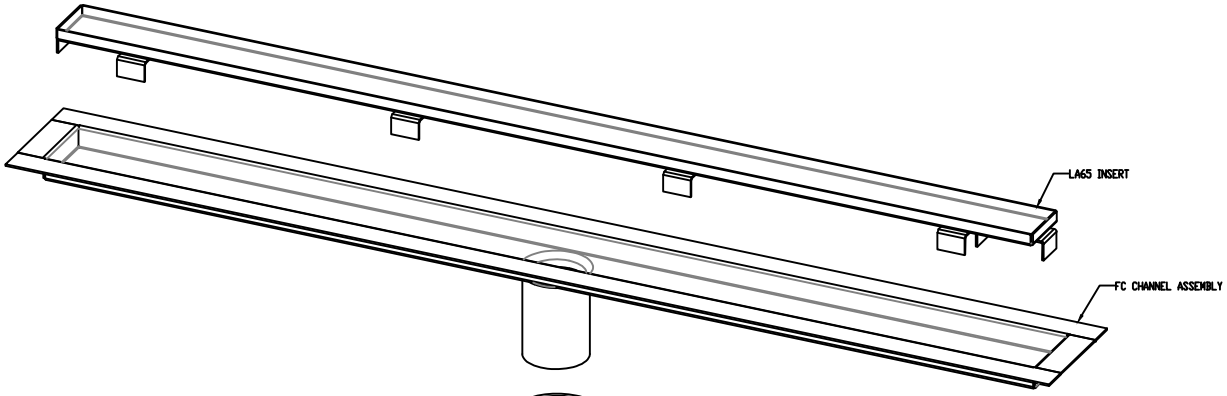

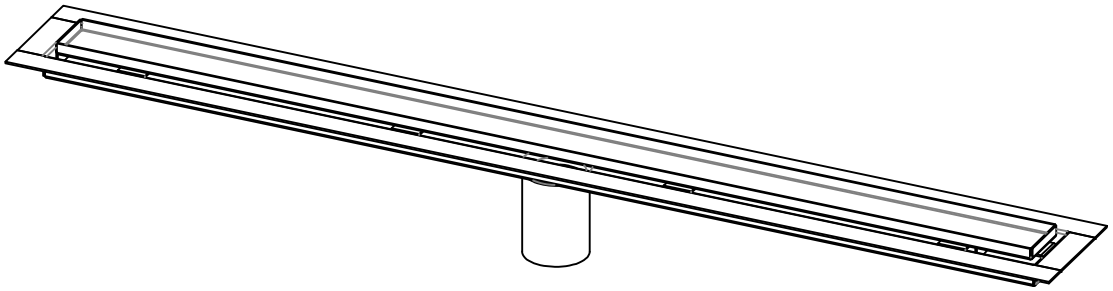

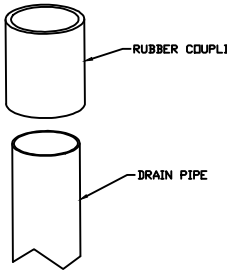

UNLESS OTHERWISE SPECIFIED:		NAME	DATE	42" LATICRETE Hydro Ban Linear Drain - Tile-In
DIMENSIONS ARE IN INCHES TOLERANCES: FRACTIONAL ± ANGULAR: MACH ± BEND ± TWO PLACE DECIMAL ± THREE PLACE DECIMAL ±	DRAWN	CT	4-11-13	TITLE: TI48 42" LATICRETE Hydro Ban Linear Drain - Tile-In
	CHECKED			
	ENG APPR.			
	MFG APPR.			
INTERPRET GEOMETRIC TOLERANCING PER:	Q.A.			SIZE D · DWG. NO. TI42 · REV
MATERIAL	COMMENTS:			SCALE: 1:2 · WEIGHT: · SHEET 1 OF 1
FINISH				